OTC.300.1786

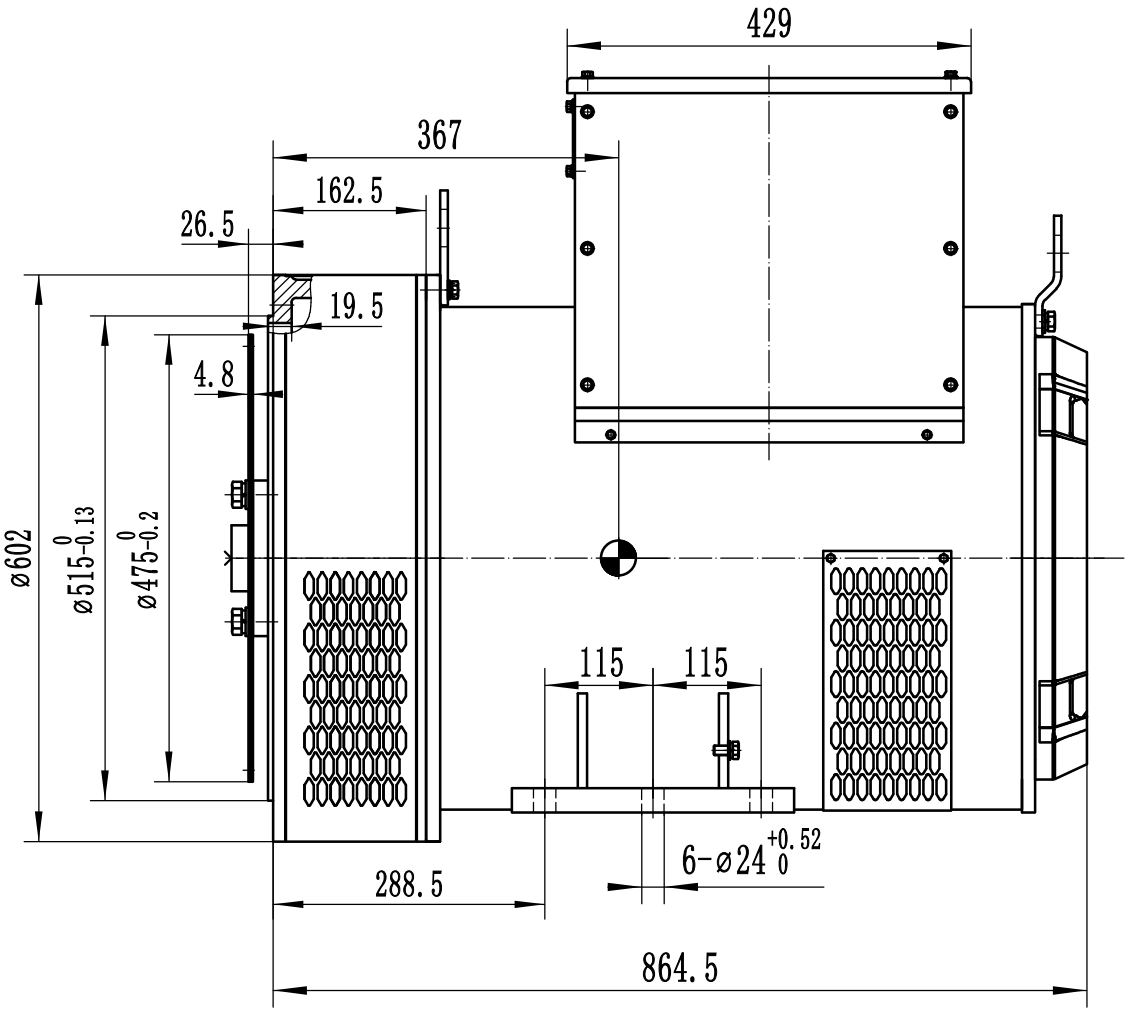


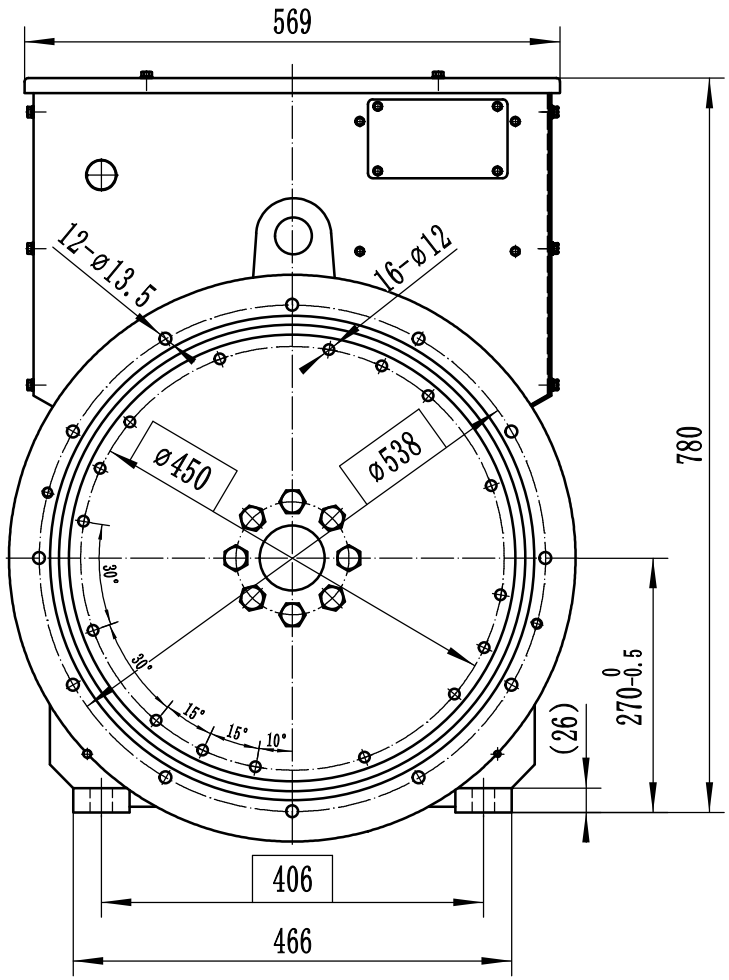


NOTES:1 ⊕ Gravity point

2 Size of the unit is mm

3 Protection grade is IP21 or IP23

| | | | | | | | | |
|---|---|---|---|---|---|---|---|---|
| DRN | | | AUD | | | OTC.300.1786 | | TCU288D DIMENSION |
| | | | | | | SCALE | VERSION | |
| CHD | | | APPD | | | | | EvoTec Power Generation Co.,Ltd |